EN
TW

Brook

# P5 Mini

## FIGHTING BOARD

# User Guide

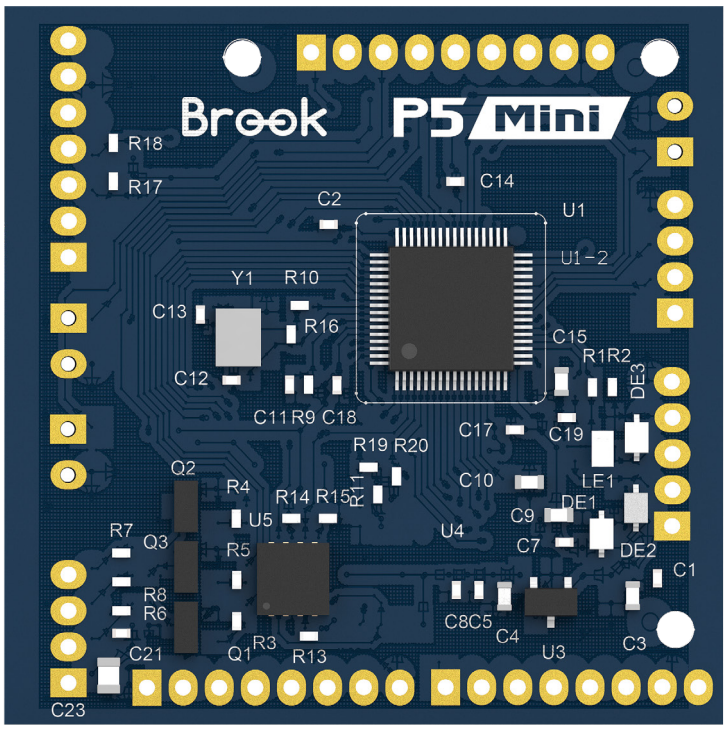


© Brook All Rights Reserved.
www.brookaccessory.com

# How to connect the keys

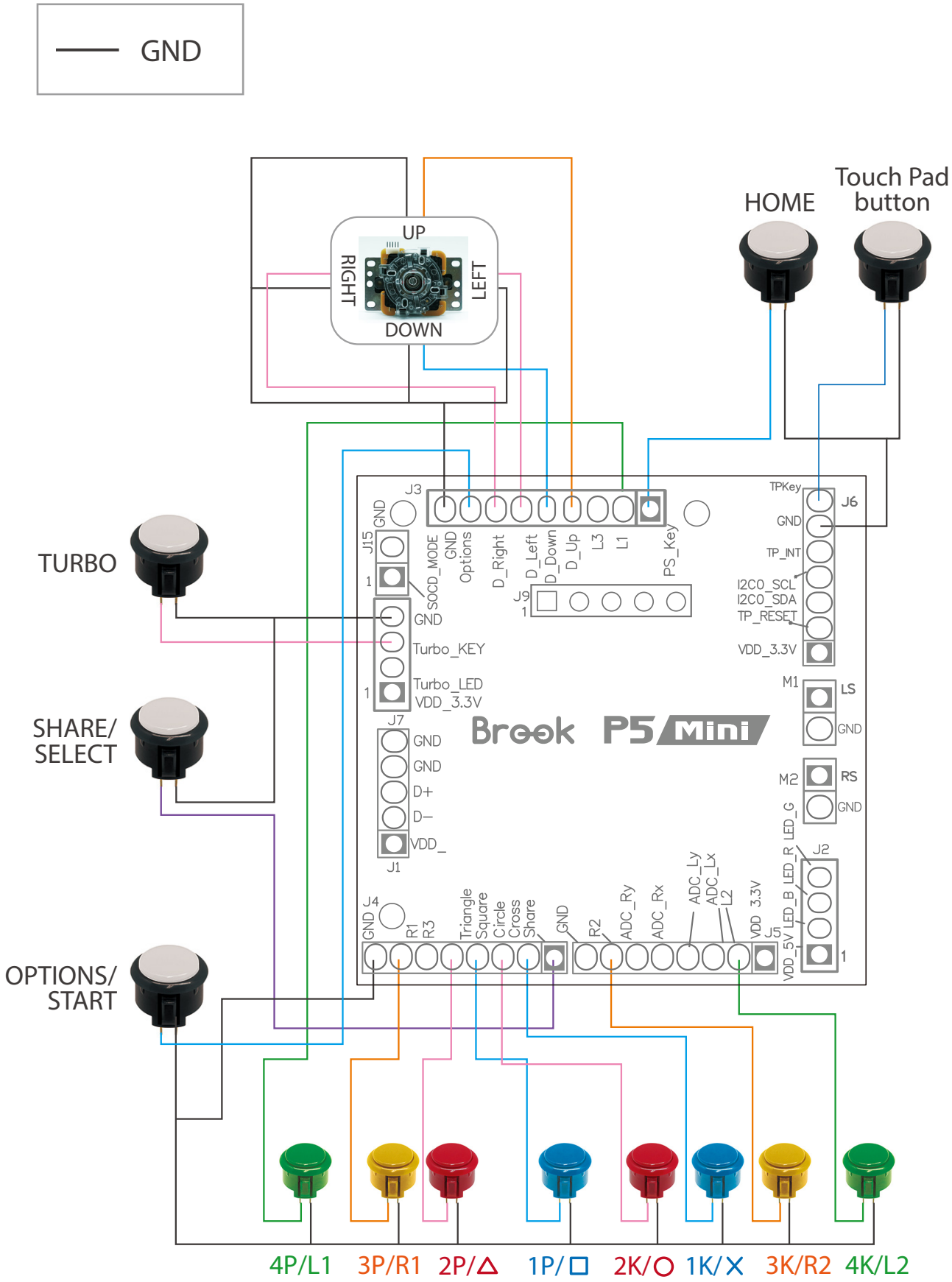

# How to connect the controller LED

Power

Users should pick an LED with voltage of 1.5 V or higher to keep the current at a safe level.

EN
TW

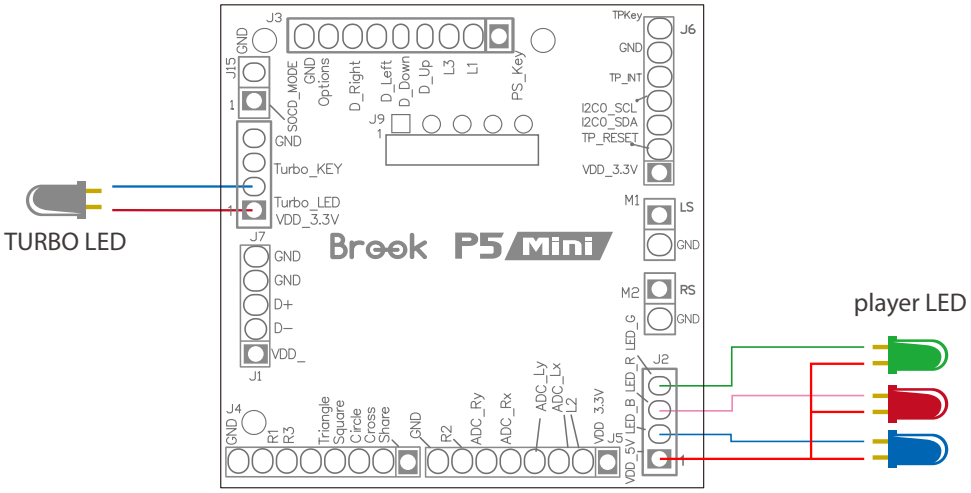


# How to connect the USB

GND
Power

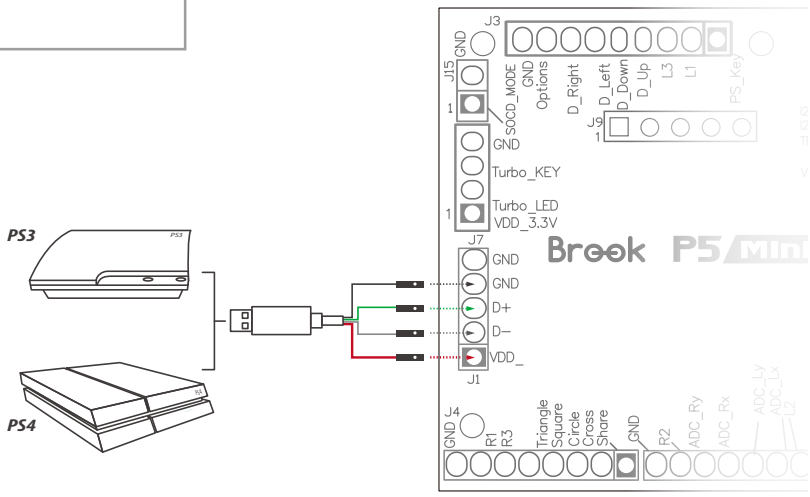

# LS/RS/DP Switch

EN
TW

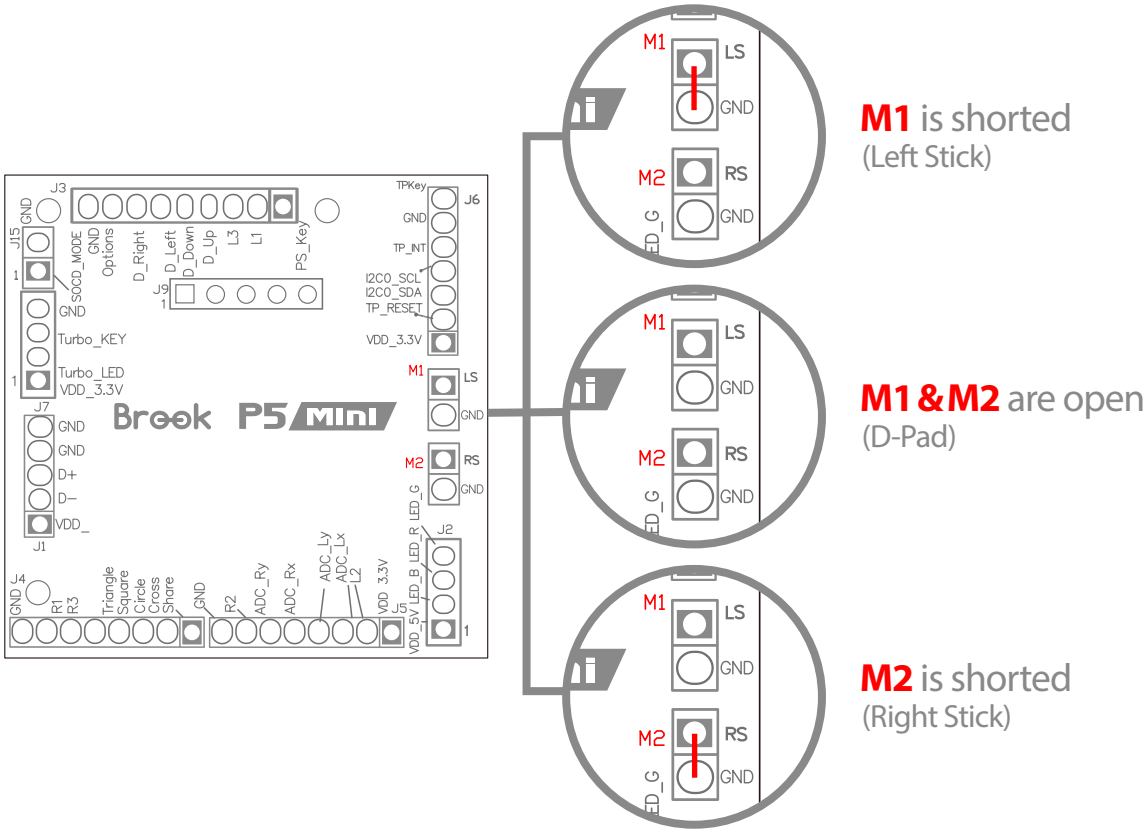

# Console manual selection

The P5 PLUS FIGHTING BOARD support manual selection of PS5 , PS4 , PS3 , Switch.

EN
TW

## Manual Mode

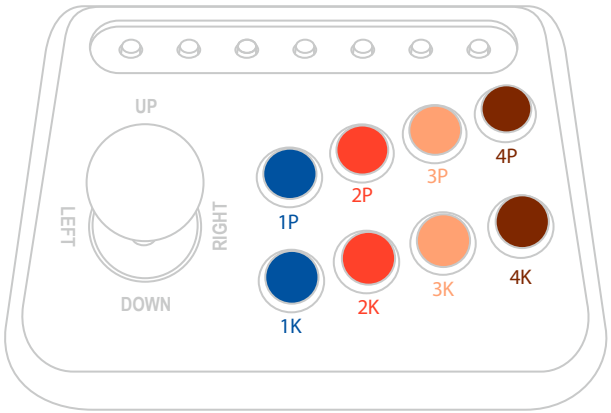


***Step.1 Press button.***

1P = PS3

2P = PS4、PS5

3P = PC

1K = Switch

***Step.2 While Pressing connect fightstick to PC / Console***

* When uses manual mode, the device mode will be saved automatically. If you want to switch back to the automatic detection mode, please hold down "Option (menu)" button and then plug USB cable to PC / console.

# SOCD Mode Switching Tutorial

EN
TW

Simultaneous Opposing Cardinal Directions.

1. Default setting is mode 1.
2. SOCD will be automatically saved.

Switch method

Please **hold down** the corresponding button first, then insert the power cable into the console to switch modes.

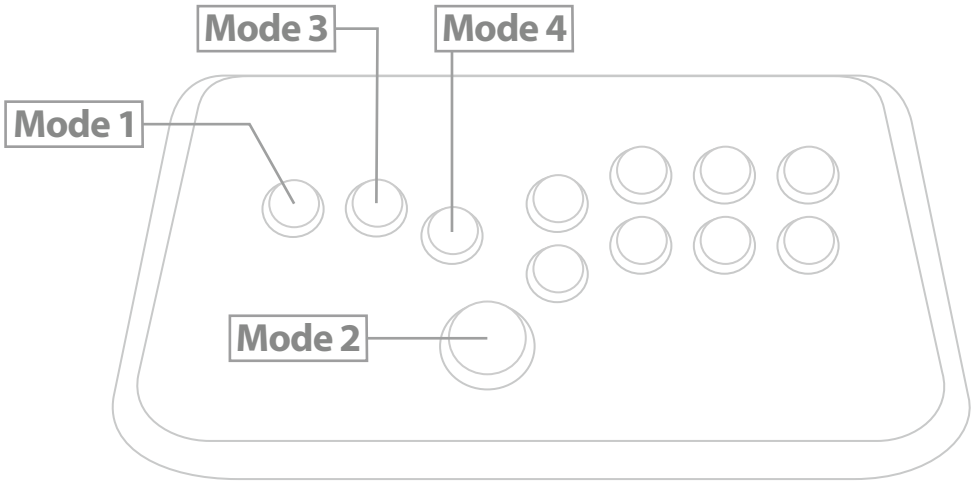


| | Mode 1<br>UP Priority | Mode 2<br>CAPCOM / Neutral | Mode 3<br>Last Priority | Mode 4<br>BYPASS |
|---|---|---|---|---|
| ← + → | Neutral | Neutral | → | ← + → |
| → + ← | Neutral | | ← | → + ← |
| ↑ + ↓ | ↑ | | ↓ | ↑ + ↓ |
| ↓ + ↑ | ↑ | | ↑ | ↓ + ↑ |

EN
TW

Brook

**ZEROPLUS TECHNOLOGY CO.,LTD.**

www.brookaccessory.com

Visit our website for more information and assistance.

©2023 Zeroplus Technology Co., Ltd. All Rights Reserved.
Brook is the registered trademark of Zeroplus Technology Co., Ltd. The other trademark names are the used marks, trademarks or registered trademarks of the corresponding companies.

Brook Gaming

202312V2.0

EN
TW

Brook

# P5 Mini

## FIGHTING BOARD

# 使用者指南

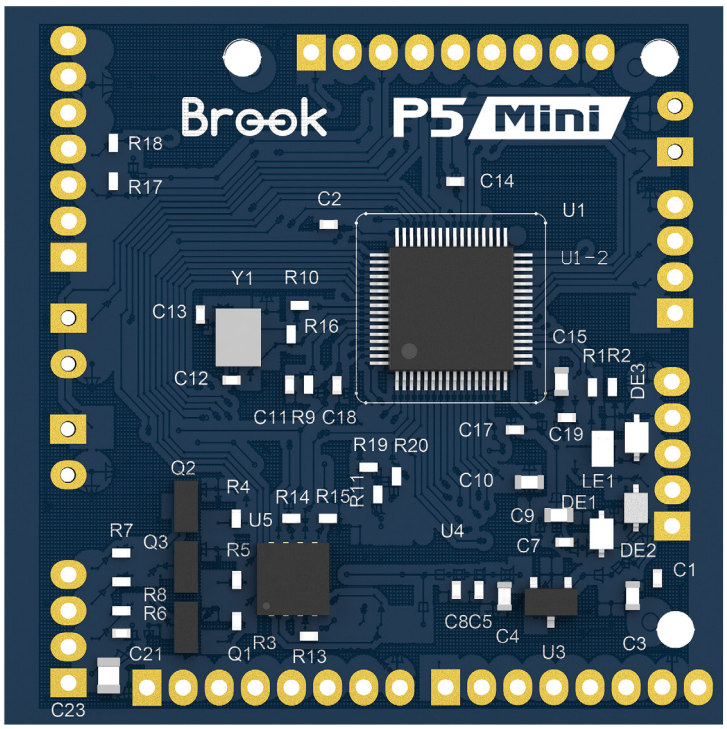


Brook INSIDE

© Brook All Rights Reserved.
www.brookaccessory.com

# 如何連接按鈕

—— 接地線

EN
TW

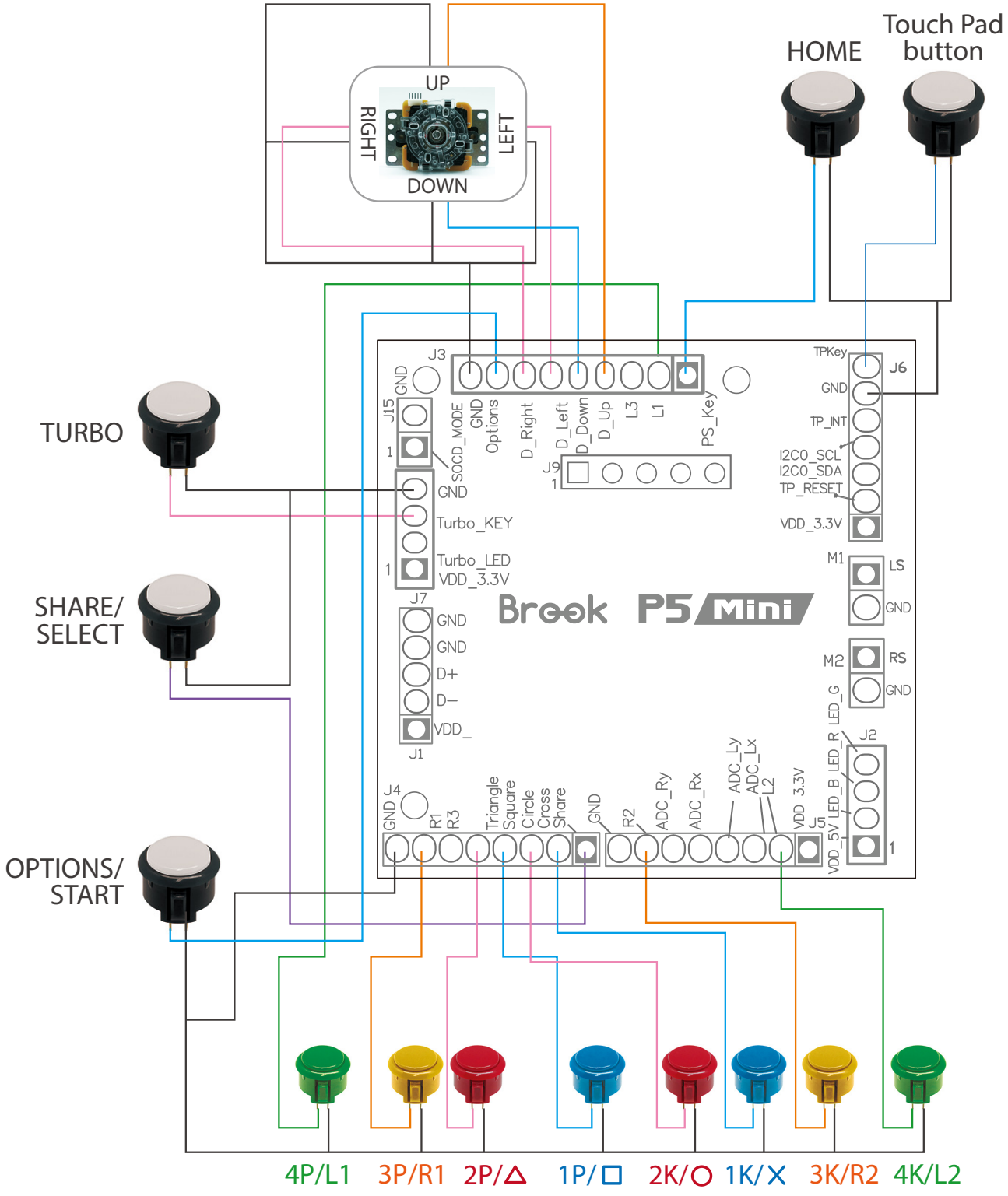

# 如何連接 LED 燈號

電源線

LED燈號順向偏壓建議為 1.5V 以上

EN
TW

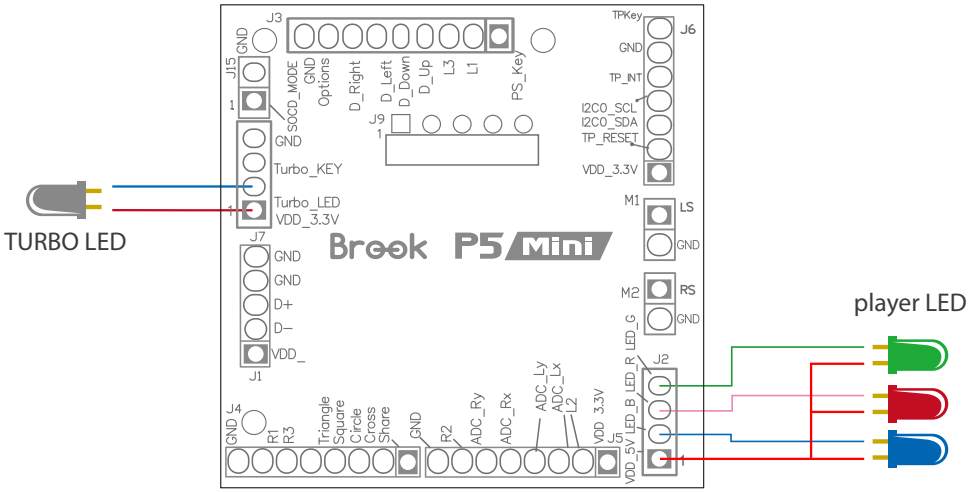


# 如何連接 USB

接地線
電源線

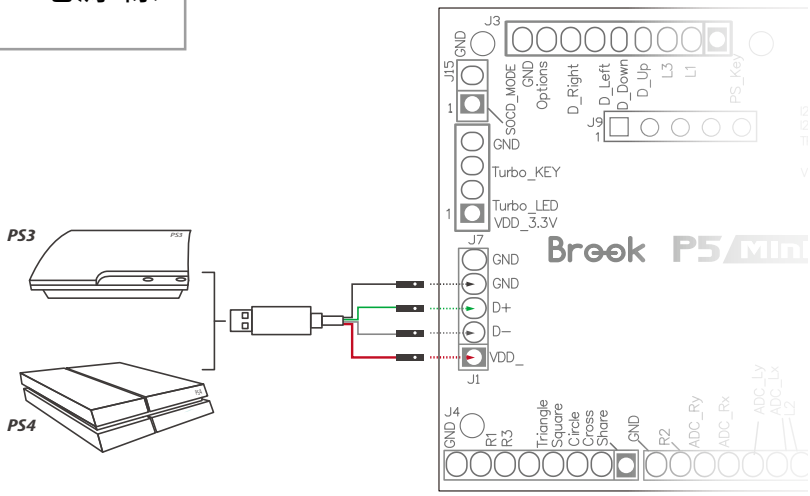

# 搖桿模式切換

EN
TW

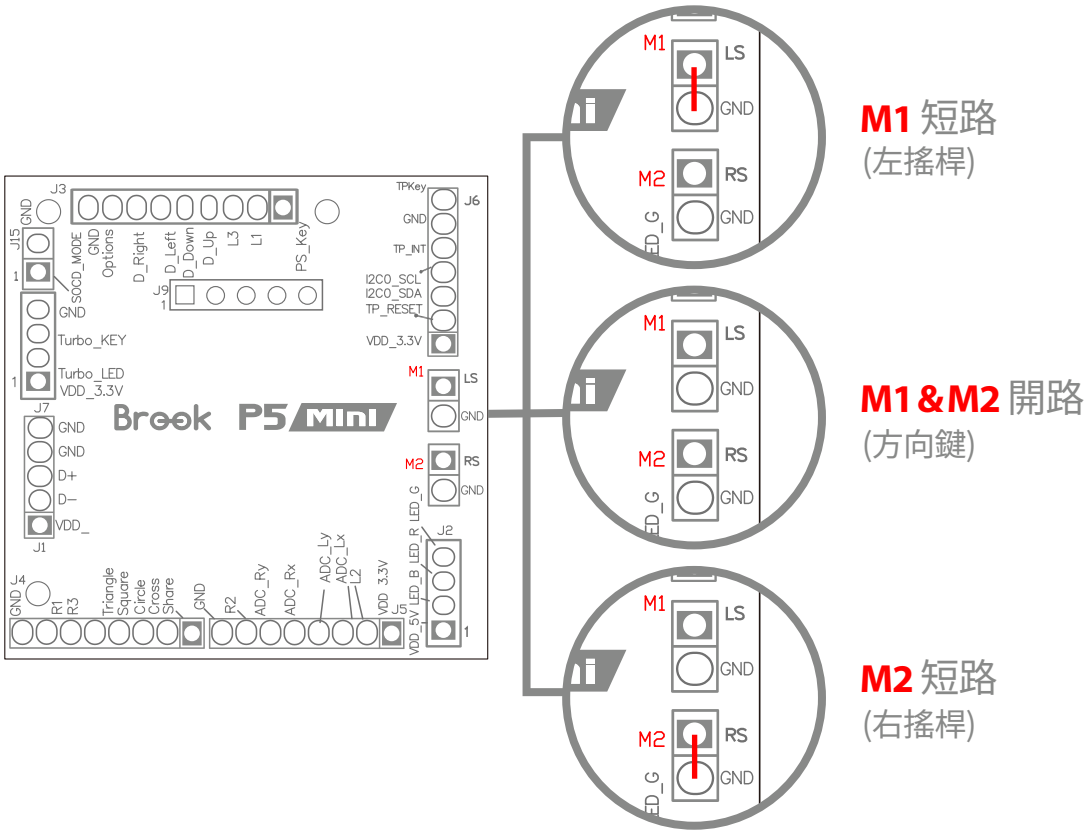

# 手動選擇模式

可手動設定 PS5 / PS3 / PS4 / Switch模式。

EN
TW

## 手動模式操作步驟

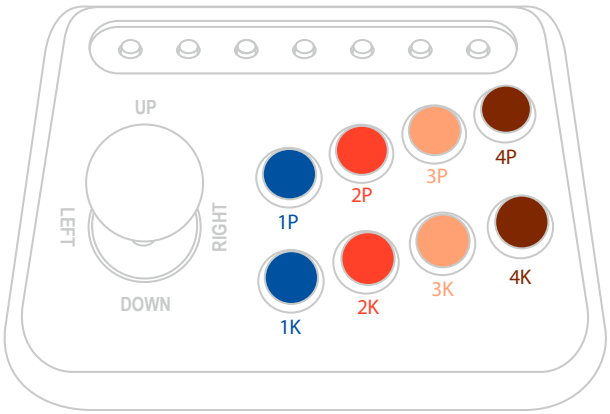


**步驟 *1.*** 按住不放。

1P = PS3

2P = PS4、PS5

3P = PC

1K = Switch

**步驟 *2.*** 大搖桿連接 ***PC*** 或 主機。

* 手動設定模式後，會自動儲存所選模式。如要切換回自動偵測模式，請按住“Option (menu)”並重新插上USB 連接電腦或遊戲主機。

# SOCD 模式切換教學

EN
TW

SOCD意為相反方向指令衝突時，判定主要輸出指令的模式。

1. 出廠預設值是Mode 1。
2. SOCD模式設定後會自動儲存。

切換 按住以下**對應按鈕**後，將電源線插入主機進行切換。

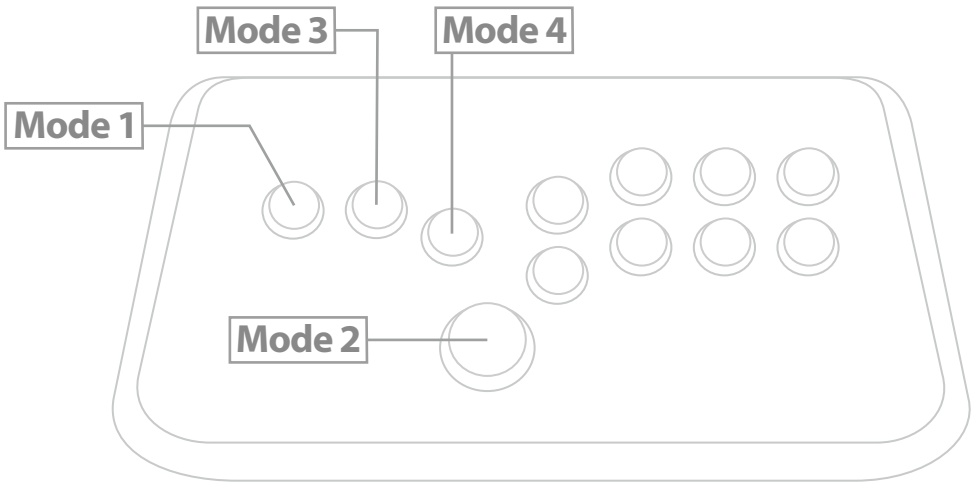


| | Mode 1<br>上優先 | Mode 2<br>CAPCOM / Neutral | Mode 3<br>後優先 | Mode 4<br>全輸入 |
|---|---|---|---|---|
| ← + → | Neutral | Neutral | → | ← + → |
| → + ← | Neutral | | ← | → + ← |
| ↑ + ↓ | ↑ | | ↓ | ↑ + ↓ |
| ↓ + ↑ | ↑ | | ↑ | ↓ + ↑ |

EN
TW

Brook

**ZEROPLUS TECHNOLOGY CO.,LTD.**

www.brookaccessory.com

Visit our website for more information and assistance.

©2023 Zeroplus Technology Co., Ltd. All Rights Reserved.
Brook is the registered trademark of Zeroplus Technology Co., Ltd. The other trademark names are the used marks, trademarks or registered trademarks of the corresponding companies.

Brook Gaming

202312V2.0